HOIST/DERRICK CONTROL VALVE ASSEMBLY

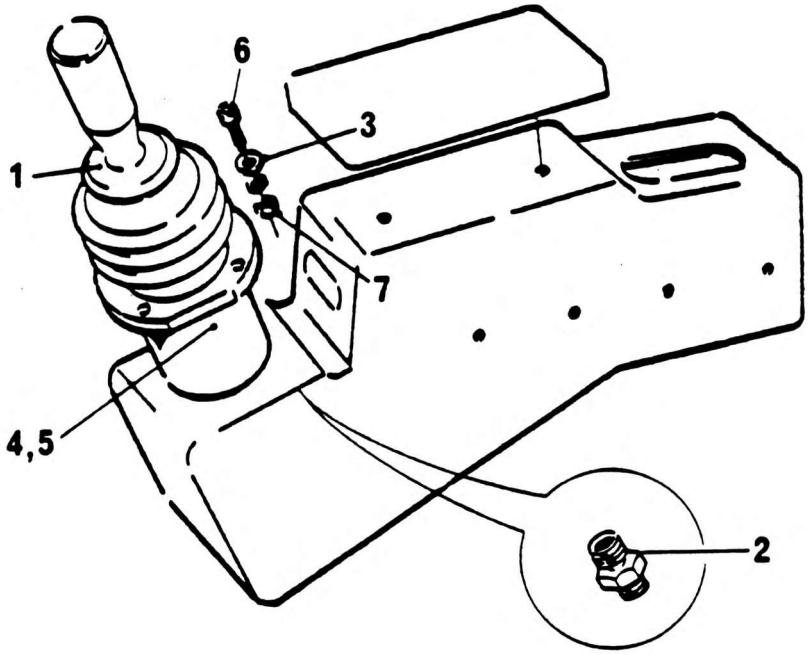

NO.	PART NO.	QTY.	DESCRIPTION	NO.	PART NO.	QTY.	DESCRIPTION
1 +	7-352-990187	1	Valve Control LH				
2	7-447-040601	6	Adaptor ¼" BSP x ¼" BSP				
3	6-910-990772	4	Spacer				
4	7058001	2	Screw Self Tap No. 4				
5	8411630	1	Nameplate				
6	7-101-100810	4	Screw				
7	7-429-000035	4	Well Nut Fastener				

+ See further breakdown in this group